Level Pressure Flow Temperature Liquid Analysis Registration Systems Components Services Solutions

Technical Information

Ceraliquid CPS41 and CPS41D

pH electrodes, analog and digital with Memosens technology
With ceramic diaphragm and liquid KCl electrolyte, optional built-in temperature sensor

Application

Media with very low conductivities or a high percentage of organic solvents or alcohols:
- Food industry
- Biotechnology
- Laboratory measurements
- Power plants

With ATEX, FM and CSA approval for application in hazardous areas

Your benefits

- Liquid KCl electrolyte enabling use at very low conductivities (≥ 0.1 µS/cm)
- Ceramic diaphragm with defined KCl flow
- Application under pressures of up to 145 psi / 10 bar with counter pressure
- Stable reference thanks to separate reference lead with slowly diffusing electrolyte
- Suitable for CIP / SIP cleaning
- pH membrane glass suitable for steam sterilization
- Four lengths available: 120, 225, 360 and 425 mm
- Available with built-in Pt 100, Pt 1000 or NTC temperature sensor

Further benefits offered by Memosens technology

- Maximum process safety through contactless inductive signal transmission
- Data safety through digital data transmission
- Easy handling due to storage of sensor-specific data
- Predictive maintenance possible thanks to registration of sensor load data

TI079C/24/ae/02.05

Endress+Hauser
People for Process Automation

Function and system design

Measuring principle

pH measurement
The pH value is used as a unit of measurement for the acidity or alkalinity of a liquid medium. The membrane glass of the electrode supplies an electrochemical potential which is dependent upon the pH value of the medium. This potential is generated by the selective penetration of H^+ ions through the outer layer of the membrane. An electrochemical boundary layer with an electric potential forms at this point. An integrated Ag/AgCl reference system serves as reference electrode.
The transmitter converts the measured voltage into the corresponding pH value using the Nernst equation.

General properties

- **Application at low conductivity**
  Thanks to its liquid KCl electrolyte filling, the electrode can be applied at very low conductivities (≥ 5 µS/cm with one diaphram, ≥ 0.1 µS/cm with three diaphragms).
- **Sterilizable**
  The electrode can be used in applications with steam sterilization max. 275°F (135°C).
- **Durability**
  The electrode can be applied under pressures of up to 145 psi (10 bar) with counter pressure.

Important properties of CPS41D

Maximum process safety
The inductive and non-contacting measured value transfer of Memosens guarantees maximum process safety and offers the following benefits:

- All problems caused by moisture are eliminated.
  - The plug-in connection is free from corrosion.
  - Measured value distortion from moisture is not possible.
  - The plug-in system can even be connected under water.
- The transmitter is galvanically disconnected from the medium. The result: No more need to ask about "symmetrically high-impedance" or "unsymmetrical" or an impedance converter.
- The cable does not act like an antenna. Thus, EMC safety is guaranteed.

Data safety through digital data transfer
The Memosens technology digitizes the measured value in the sensor and transfers it to the transmitter via a contactless connection. The result:

- An automatic error message is generated if the sensor fails or the connection between sensor and transmitter is interrupted.
- The availability of the measuring point is dramatically increased by immediate error detection.
- The digital signals are suitable for application in hazardous areas; the integrated electronics are intrinsically safe.

Easy handling
Sensors with Memosens technology have integrated electronics that allow for saving calibration data and further information such as total hours of operation and operating hours at very low or very high pH values. When the sensor is mounted, the calibration data are automatically transferred to the transmitter and used to calculate the current pH value. Storing the calibration data in the sensor allows for calibration and adjustment away from the measuring point. The results:

- pH sensors can be calibrated under optimum external conditions in the measuring lab. Wind and weather do not affect the calibration quality or the operator.
- The measuring point availability is dramatically increased by the quick and easy replacement of precalibrated sensors.
- The transmitter does not need to be installed close to the measuring point but can be placed in the control room.
- Maintenance intervals can be defined based on all stored sensor load data and calibration and predictive maintenance is possible.
- The sensor history can be documented on external data carriers and evaluation programs at any time. Thus, the current application of the sensors can be made to depend on their previous history.

Communication with the transmitter
Always connect the CPS41D to a digital transmitter with Memosens technology. Data transmission to an analog transmitter is not possible.

Data storage of CPS41D

Digital sensors are able to store the following system data in the sensor.

- Manufacturing data
  - Serial number
  - Order code
  - Date of manufacture
- Calibration data
  - Calibration date
  - Calibrated slope at 77°F (25°C)
  - Calibrated zero point at 77°F (25°C)
  - Temperature offset
  - Number of calibrations
  - Serial number of the transmitter used for the last calibration
- Application data
  - Temperature application range
  - pH application range
  - Date of first commissioning
  - Maximum temperature value
  - Operating hours at temperatures above 176°F (80°C) and 212°F (100°C)
  - Operating hours at very low and very high pH values (Nernst voltage below -300 mV, above +300 mV)
  - Number of sterilizations
  - Glass membrane impedance

System data can be displayed with the Mycom S transmitter

Measuring system

A complete measuring system comprises:
- CPS41 or CPS41D pH electrode
- Transmitter, e.g. Liquisys M CPM223/253 (for CPS41D with Memosens technology)
- Special measuring cable, e.g. CPK9 or Memosens data cable for CPS41D
- Immersion, flow or retractable assembly, e.g. Unifit H CPA441

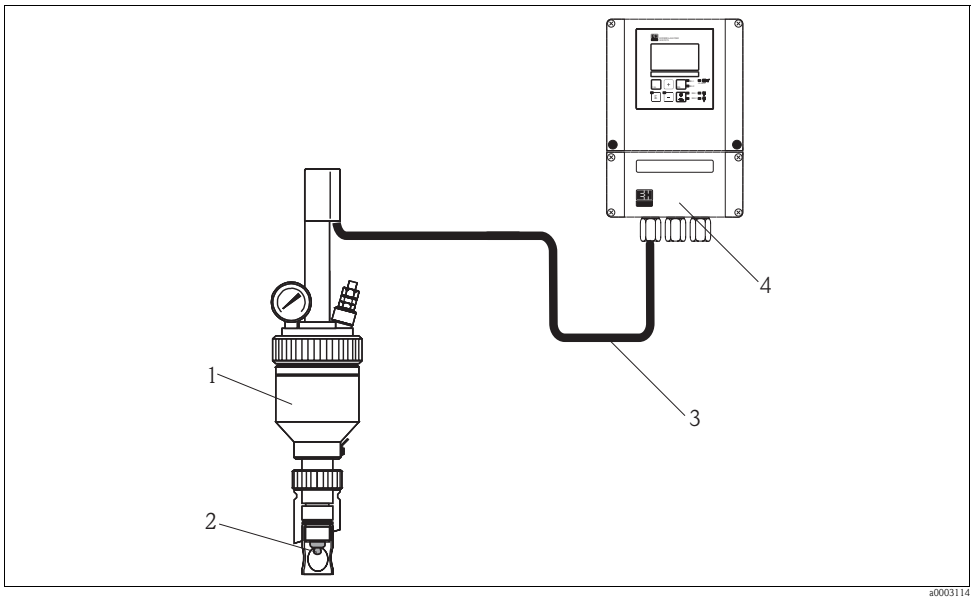

Measuring system for redox measurement

1 Unifit H CPA441
2 CPS41 / CPS41D pH electrode
3 CPK9 special measuring cable (for electrodes with TOP68 plug-in head) / CYK10 for digital sensors
4 Liquisys M CPM253 transmitter

Input

Measured variables

pH value
Temperature

Measuring range

Electrode version AB and AC (for water / wastewater):

pH:	1 to 12
Temperature:	5 to 176°F (-15 to 80°C)

Electrode version BB and BC (for process applications, sterilizable)

pH:	0 to 14
Temperature:	32 to 275°F (0 to 135°C)

Caution!
Please note the process operating conditions.

Installation

Installation instructions

Do not install the electrode upside down. The inclination angle must be at least 15° from the horizontal. A smaller inclination angle is not permitted as such an inclination results in air cushion forming in the glass sphere. This might impair full wetting of the pH membrane with inner electrolyte.

Caution!
- Make sure that the assembly's threaded connection for the electrode is clean and well running before installing the electrode.
- Hand tighten the electrode 2 lbf x ft (3 Nm)! (Given value only applies to installation in Endress+Hauser assemblies.)
- Make sure to follow the installation instructions in the operating instructions of the used assembly.

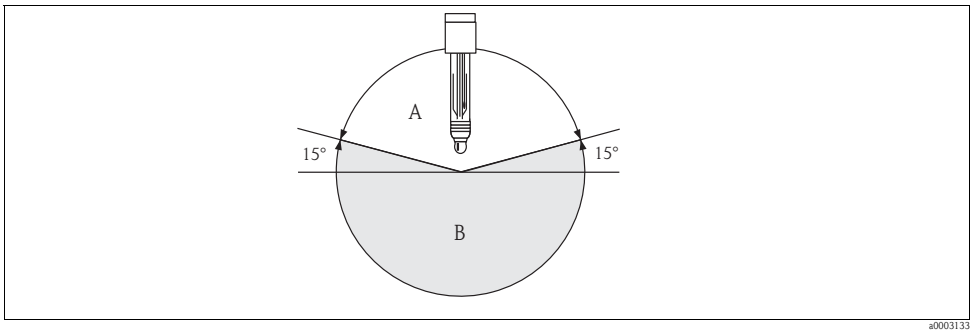

Electrode installation; inclination angle min. 15° from the horizontal

A Permitted inclination angle
B Non-permitted inclination angle

Environment

Ambient temperature

Caution!
Danger of frost damage
Do not use the electrode at temperatures below 5°F (–15°C).

Storage temperature

32 to 122°F (0 to 50°C)

Ingress protection

IP 67:	GSA and SSA plug-in heads (with closed plug-in connection)
IP 68:	TOP68 plug-in head, autoclavable up to 275°F /135°C (3.28 ft water column / 1 m, 122°F / 50°C, 168 h)
IP 68:	Memosens plug-in head (32.81 ft water column / 10 m, 77°F / 25°C, 45 days, 1M KCl)

Process

Process temperature

Versions AB, AC:	5 to 176°F (-15 to 80°C)
Versions BB, BC:	32 to 275°F (0 to 135°C)

Process pressure

0 to 145 psi (0 to 10 bar) with counter pressure via a separate KCl vessel

Mininum conductivity

Electrodes with 1 diaphragm:	min. 5 µS/cm
Electrodes with 3 diaphragms:	min. 0.1 µS/cm

pH range

Versions AB, AC:	1 to 12 pH
Versions BB, BC:	0 to 14 pH

Caution!
Danger of electrode damage
Do not operate the electrodes in applications outside the given specifications!

KCl consumption

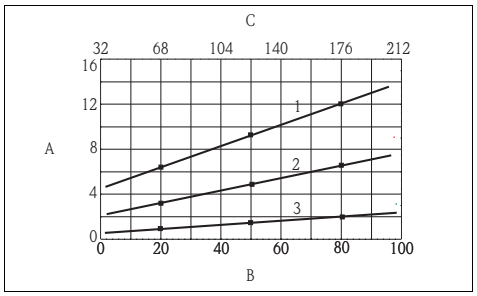

KCl consumption dependent on temperature

A	Consumption (ml/day)
B	Temperature (°C)
C	Temperature (°F)
1	11.6 psi (800 mbar) overpressure
2	5.8 psi (400 mbar) overpressure
3	1.5 psi (100 mbar) overpressure

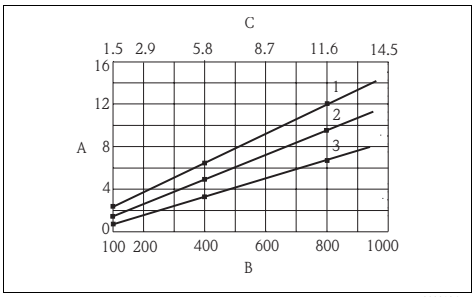

KCl consumption dependent on process pressure

A	Consumption (ml/day)
B	Overpressure to process (mbar)
C	Overpressure to process (psi)
1	176°F (80°C) medium temperature
2	122°F (50°C) medium temperature
3	68°F (20°C) medium temperature

Mechanical construction

Design, dimensions CPS41

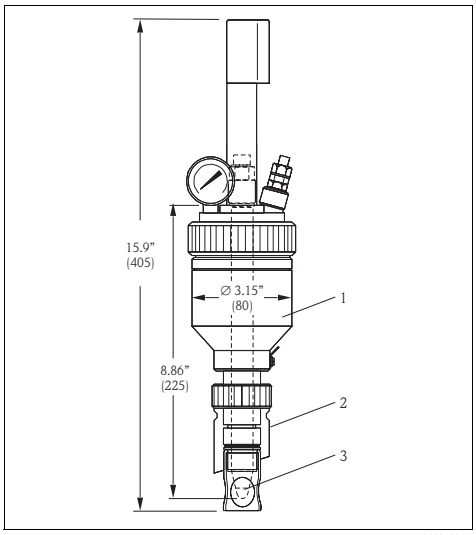

a0003109-en

Unifit H CPA441 with CPS41

1 KCl reservoir
2 Mounting device
3 CPS41 (shaft length 8.86" / 225 mm)

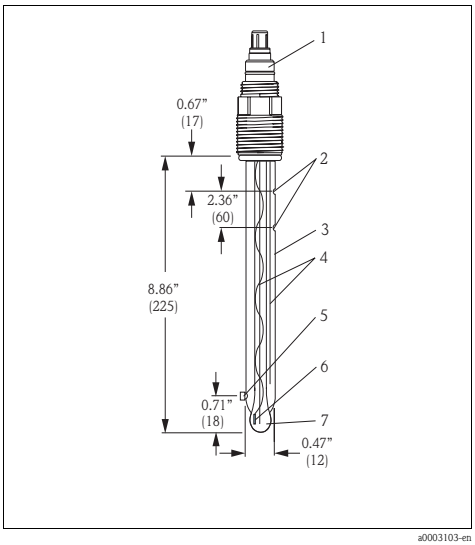

a0003103-en

CPS41 with ESA plug-in head for CPA441, temperature sensor

1 TOP68 plug-in head, Pg 13.5
2 KCl refilling
3 Liquid KCl electrolyte
4 Ag/AgCl lead
5 Ceramic diaphragm
6 Pt 100 temperature sensor
7 pH glass membrane

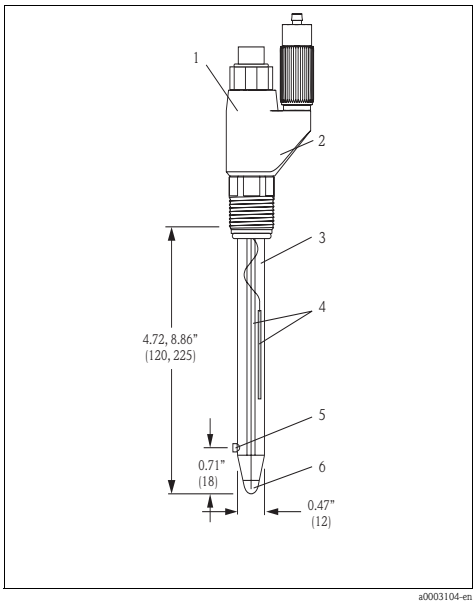

a0003104-en

CPS41 with SSA plug-in head

1 SSA plug-in head, Pg 13.5
2 Hose connection for KCl refilling
3 Liquid KCl electrolyte
4 Ag/AgCl lead
5 Ceramic diaphragm
6 pH glass membrane

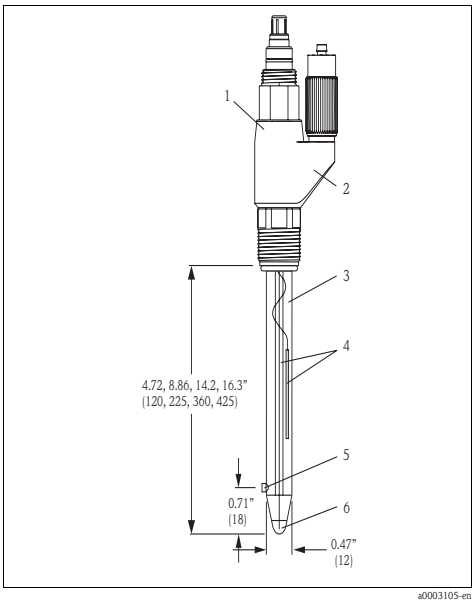

a0003105-en

CPS41 with ESS plug-in head

1 ESS plug-in head, Pg 13.5
2 Hose connection for KCl refilling
3 Liquid KCl electrolyte
4 Ag/AgCl lead
5 Ceramic diaphragm
6 pH glass membrane

Design, dimensions CPS41D

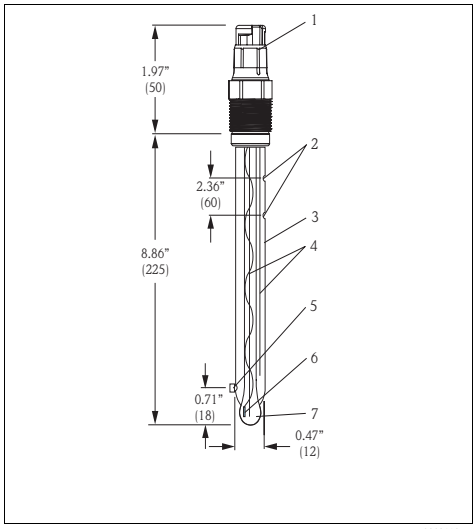

CPS41D with Memosens plug-in head for CPA441

1 Memosens plug-in head
2 KCl refilling
3 Liquid KCl electrolyte
4 Ag/AgCl lead
5 Ceramic diaphragm
6 Pt 100 temperature sensor
7 pH glass membrane

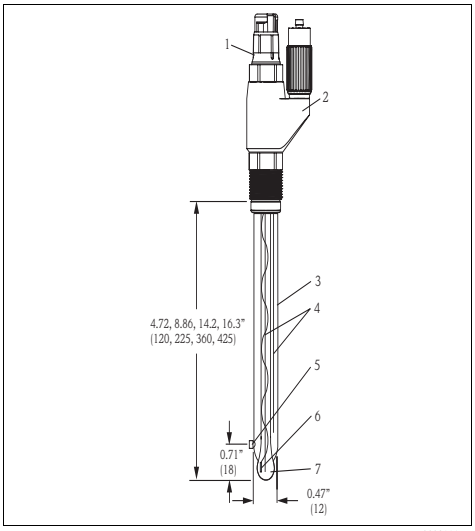

CPS41D with Memosens plug-in head and KCl connection

1 Memosens plug-in head
2 Hose connection for KCl refilling
3 Liquid KCl electrolyte
4 Ag/AgCl lead
5 Ceramic diaphragm
6 Pt 100 temperature sensor
7 pH glass membrane

Weight

0.2 lb. / 0.1 kg

Materials

Electrode shaft	process glass
pH membrane glasses	types A, B
Metal lead	Ag/AgCl
Diaphragm	ceramic diaphragm, sterilizable

Process connection

Pg 13.5

Temperature sensor

CPS41:	Pt 100, Pt 1000
CPS41D:	NTC

Plug-in heads

CPS41

ESA:	Threaded plug-in head Pg 13.5, TOP68 for electrodes with and without temperature sensor, 232 psi (16 bar), Ex
ESS:	Plug-in head with hose connection for KCl refilling Pg 13.5, TOP68 for electrodes with and without temperature sensor, 232 psi (16 bar), Ex
GSA:	Threaded plug-in head Pg 13.5 for electrodes without temperature sensor
SSA:	Plug-in head with hose connection for KCl refilling Pg 13.5, for electrodes without temperature sensor

CPS41D: Memosens plug-in head for digital, contactless data transmission

Reference system

Ag /AgCl metal lead with liquid KCl, 3M, AgCl free

Certificates and approvals

Ex approval CPS41 (ESA, ESS)

- ATEX II 2G EEX ia IIC T3/T4/T6
- FM Class I Div. 2, in combination with the Mypro CPM431 and Mycom S CPM153 transmitters

Ex approval CPS41D

- ATEX II 2G EEx ia IIC T3/T4/T6

Note!
Ex versions of digital sensors with Memosens technology are indicated by an orange-red ring in the plug-in head.

Biocompatibility

Biocompatibility validated according to:

- ISO 10993-5:1993
- USP, current revision

TÜV certificate TOP68 plug-in head

Pressure resistance 232 psi (16 bar), min. triple overpressure safety

TÜV certificate Memosens plug-in head

Pressure resistance 232 psi (16 bar), min. triple overpressure safety

Electromagnetic compatibility of CPS41D

Interference emission and interference immunity complies with EN 61326: 1997 / A1: 1998

Ordering information

Product structure CPS41

	Electrode type				
	1	without temperature sensor			
	2	with built-in Pt 100 (not available with GSA and SSA plug-in heads)			
	3	with built-in Pt 1000 (not available with GSA and SSA plug-in heads)			
		Application range			
		AB	pH = 1 to 12, T = 5 to 176°F (-15 to 80°C), 1 diaphragm		
		AC	pH = 1 to 12, T = 5 to 176°F (-15 to 80°C), 3 diaphragms		
		BB	pH = 0 to 14, T = 32 to 275°F (0 to 135°C), 1 diaphragm, sterilizable		
		BC	pH = 0 to 14, T = 32 to 275°F (0 to 135°C), 3 diaphragms, sterilizable		
			Shaft length		
			2	120 mm / 4.72" (ESS and SSA plug-in heads only)	
			4	225 mm / 8.86"	
			5	360 mm / 14.17" (ESS plug-in head only)	
			6	425 mm / 16.73" (ESS plug-in head only)	
				Plug-in head	
				ESA	Plug-in head Pg 13.5, TOP68, 232 psi (16 bar), Ex
				ESS	Hose connection head Pg 13.5, TOP68, Ex
				GSA	Plug-in head Pg 13.5, DIN coax, non Ex
				SSA	Hose connection head Pg 13.5, non Ex
CPS41-					complete order code

Product structure CPS41D

	Version				
	7	Basic version			
		Application range			
		AB	pH = 1 to 12, T = 5 to 176°F (-15 to 80°C), 1 diaphragm		
		AC	pH = 1 to 12, T = 5 to 176°F (-15 to 80°C), 3 diaphragms		
		BB	pH = 0 to 14, T = 32 to 275°F (0 to 135°C), 1 diaphragm, sterilizable		
		BC	pH = 0 to 14, T = 32 to 275°F (0 to 135°C), 3 diaphragms, sterilizable		
			Shaft length		
			2	120 mm / 4.72" (versions with KCl hose connection only)	
			4	225 mm / 8.86"	
			5	360 mm / 14.17" (versions with KCl hose connection only)	
			6	425 mm / 16.73" (versions with KCl hose connection only)	
				Electrolyte supply	
				A	Shaft hole for KCl refilling, CPA441
				B	KCl hose connection, CPY7
				Approval	
				1	Non-hazardous area
				G	ATEX II 2G EEx ia IIC T3/T4/T6
CPS41D-					complete order code

Accessories

Note!
In the following sections, you find the accessories available at the time of issue of this documentation.
For information on accessories that are not listed here, please contact your responsible service.

Assemblies (Selection)

- Cleanfit W CPA450
  Manually operated retractable assembly for pH/redox electrodes, for installation of 120 mm / 4.72" electrodes in tanks and pipes
  Ordering acc. to product structure, see Technical Information (TI183C/24/ae)
- Cleanfit P CPA471
  Compact retractable stainless steel assembly for installation in tanks and pipes, manual or pneumatic operation
  Ordering acc. to product structure, see Technical Information (TI217C/24/ae)
- Cleanfit P CPA472
  Compact retractable plastic assembly for installation in tanks or pipes, manual or pneumatic operation
  Ordering acc. to product structure, see Technical Information (TI223C/24/ae)
- Cleanfit P CPA473
  Retractable stainless steel process assembly with ball valve for a particularly safe and reliable separation of the medium from the environment
  Ordering acc. to product structure, see Technical Information (TI344C/24/ae)
- Cleanfit P CPA474
  Retractable plastic process assembly with ball valve for a particularly safe and reliable separation of the medium from the environment
  Ordering acc. to product structure, see Technical Information (TI345C/24/ae)

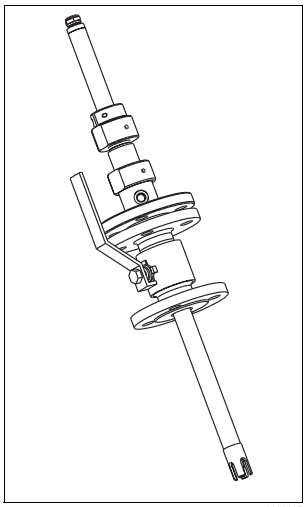

Cleanfit W CPA450

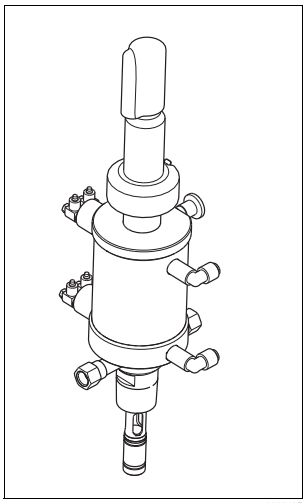

Cleanfit P CPA471 bzw. 472

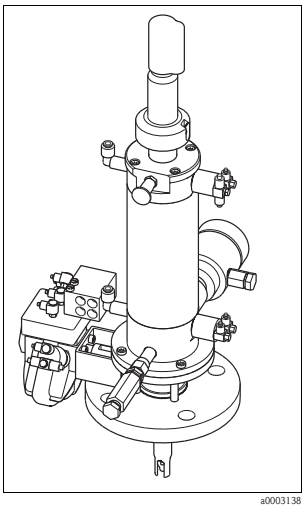

Cleanfit P CPA473 bzw. 474

- Cleanfit H CPA475
  Retractable assembly for installation in tanks and pipes under sterile conditions
  Ordering acc. to product structure, see Technical Information (TI240C/24/ae)
- Unifit H CPA441
  Process assembly with integrated electrolyte vessel for installation of pH/redox electrodes
  Ordering acc. to product structure, see Technical Information (TI026C/24/ae)
- Unifit H CPA442
  Process assembly for the food industry, biotechnology and pharmaceutical industry, complies with EHEDG criteria and 3-A standard 74-02
  Ordering acc. to product structure, see Technical Information (TI306C/24/ae)

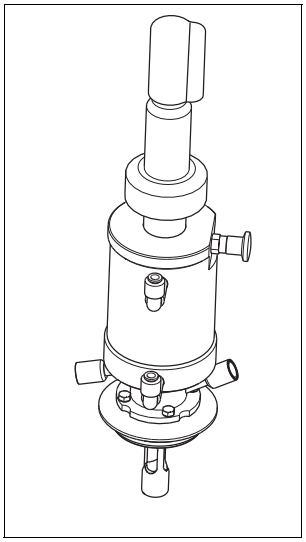
a0003136

Cleanfit H CPA475

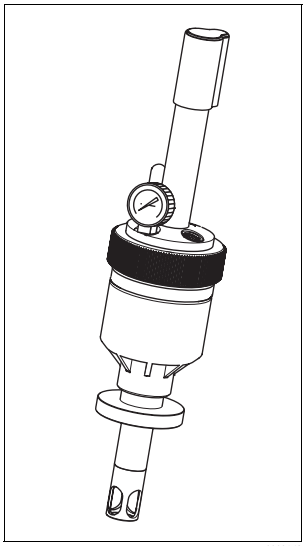
a0003162

Unifit H CPA441

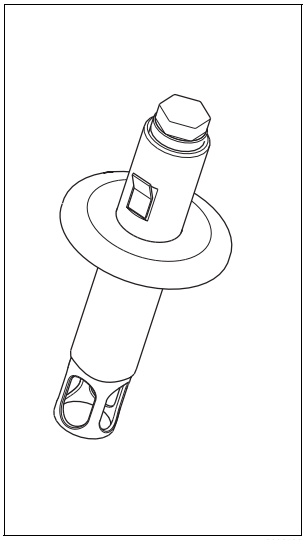
a0003139

Unifit H CPA442

- Dipfit W CPA111
  Immersion and installation assembly for open and closed tanks
  Ordering acc. to product structure, see Technical Information (TI112C/24/ae)
- Dipfit P CPA140
  Immersion assembly for pH/redox electrodes, for demanding processes
  Ordering acc. to product structure, see Technical Information (TI178C/24/ae)
- Flowfit P CPA240
  Flow assembly for pH/redox electrodes, for demanding processes
  Ordering acc. to product structure, see Technical Information (TI179C/24/ae)

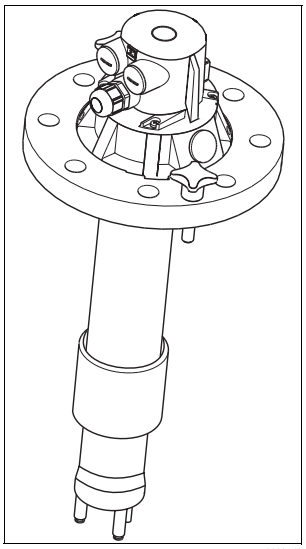
a0003140

Dipfit W CPA111

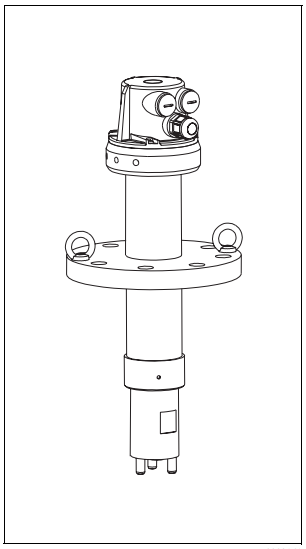
a0003141

Dipfit P CPA140

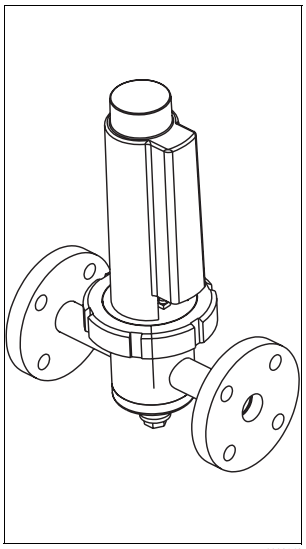
a0003142

Flowfit P CPA240

- Flowfit W CPA250
  Flow assembly for pH/redox measurement
  Ordering acc. to product structure, see Technical Information (TI041C/24/ae)
- Probfit H CPA465
  Retractable assembly for installation in tanks and pipes under sterile conditions
  Ordering acc. to product structure, see Technical Information (TI146C/24/ae)
- Ecofit CPA640
  Process connection adapter and cable set for 120 mm / 4.72" pH electrodes with TOP68 plug-in head
  Ordering acc. to product structure, see Technical Information (TI264C/24/ae)

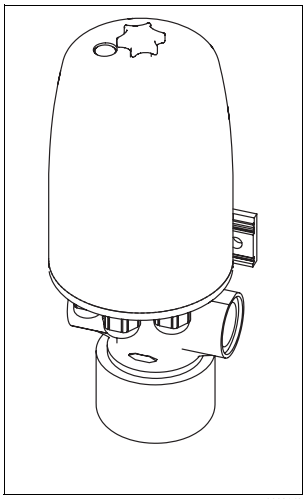

Flowfit W CPA250

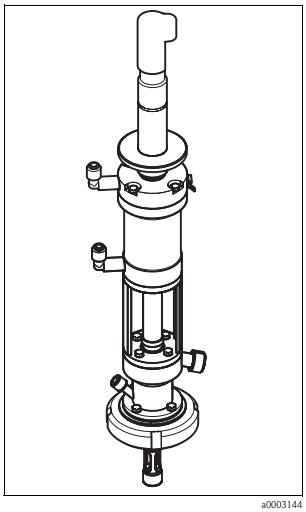

Probfit H CPA465

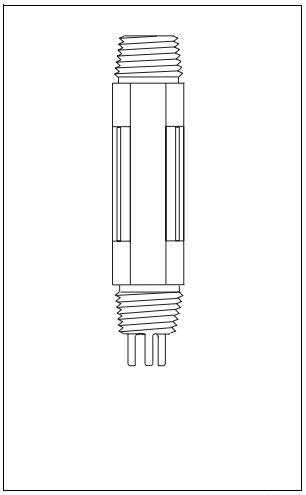

Ecofit CPA640

Electrolyte vessel

- CPY7 electrolyte vessel
  Reservoir for KCl electrolyte, 150 ml / 0.04 US.gal
  Ordering acc. to product structure, see Operating Instructions (BA 128C/07/en)

Electrolyte solutions

KCl-electrolyte solutions for liquid filled electrodes
- 3.0 mol, T = 14 to 212°F (-10 to 100°C), 100 ml (3 oz), order no. CPY4-1
- 3.0 mol, T = 14 to 212°F (-10 to 100°C), 1000 ml (30 oz), order no. CPY4-2
- 1.5 mol, T = -22 to 266°F (-30 to 100°C), 100 ml (3 oz), order no. CPY4-3
- 1.5 mol, T = -22 to 266°F (-30 to 100°C), 1000 ml (30 oz), order no. CPY4-4

Buffer solutions

Technical buffer solutions, accuracy 0.02 pH, acc. to NIST/DIN
- pH 4.0 red, 100 ml (3 oz), order no. CPY 2-0
- pH 4.0 red, 1000 ml (30 oz), order no. CPY 2-1
- pH 7.0 green, 100 ml (3 oz), order no. CPY 2-2
- pH 7.0 green, 1000 ml (30 oz), order no. CPY 2-3

Technical buffer solutions for single use, accuracy 0.02 pH, acc. to NIST/DIN
- pH 4.0 20 x 20 ml (0.6 oz), order no. CPY 2-D
- pH 7.0 20 x 20 ml (0.6 oz), order no. CPY 2-E

Transmitters

- Liquisys M CPM223/253
  Transmitter for pH and ORP, field or panel-mounted housing,
  Hart® or PROFIBUS available
  Ordering acc. to product structure, see Technical Information (TI194C/24/ae)
- Mycom S CPM153
  Transmitter for pH and redox, one or two channel version, Ex or Non-Ex,
  Hart® or PROFIBUS available
  Ordering acc. to product structure, see Technical Information (TI233C/24/ae)
- Mypro CPM431
  Two-wire transmitter for pH and redox,
  Hart® or PROFIBUS
  Ordering acc. to product structure, see Technical Information (TI173C/24/ae)

Measuring cables

- CPK9 special measuring cable
  For sensors with TOP68 plug-in head, for high-temperature and high-pressure applications, IP 68
  Ordering acc. to product structure, see Technical Information (TI118C/07/en)
- CPK1 special measuring cable
  For pH/redox electrodes with GSA plug-in head
  Ordering acc. to product structure, see Technical Information (TI118C/07/en)
- CPK12 special measuring cable
  For pH/redox glass electrodes and ISFET sensors with TOP68 plug-in head
  Ordering acc. to product structure, see Technical Information (TI118C/07/en)
- CYK10 Memosens data cable
  For digital pH sensors with Memosens technology (CPSxxD)
  Ordering according to product structure, see below

	Certificates			
	A	Standard, non Ex		
	G	ATEX II 1G EEx ia IIC T6/T4		
		Cable length		
		03	Cable length: 3 m / 9.84 ft	
		05	Cable length: 5 m / 16.41 ft	
		10	Cable length: 10 m / 32.81 ft	
		15	Cable length: 15 m / 49.22 ft	
		20	Cable length: 20 m / 65.62 ft	
		25	Cable length: 25 m / 82.03 ft	
		88	... m length	
		89	... ft length	
			Ready-made	
			1	Wire terminals
CYK10-				complete order code

Note!
Ex versions of CYK10 are indicated by an orange-red coupling end.

Notice:
Endress+Hauser reserves the right to change or modify our product appearance, specifications or order code at any time without notice.
Your Endress+Hauser distributor can supply you with current information and updates.

United States	Canada	Mexico
Endress+Hauser, Inc. 2350 Endress Place Greenwood, IN 46143 Tel. 317-535-7138 Sales 888-ENDRESS Service 800-642-8737 fax 317-535-8498 inquiry@us.endress.com www.us.endress.com	Endress+Hauser Canada 1075 Sutton Drive Burlington, ON L7L 5Z8 Tel. 905-681-9292 800-668-3199 Fax 905-681-9444 www.ca.endress.com	Endress+Hauser Paseo del Pedregal No. 610 Col. Jardines del Pedregal 01900, Mexico D.F. MEXICO Tel. 525-568-2405 Fax. 525-568-7459

TI079C/24/ae/02.05

Endress+Hauser
People for Process Automation